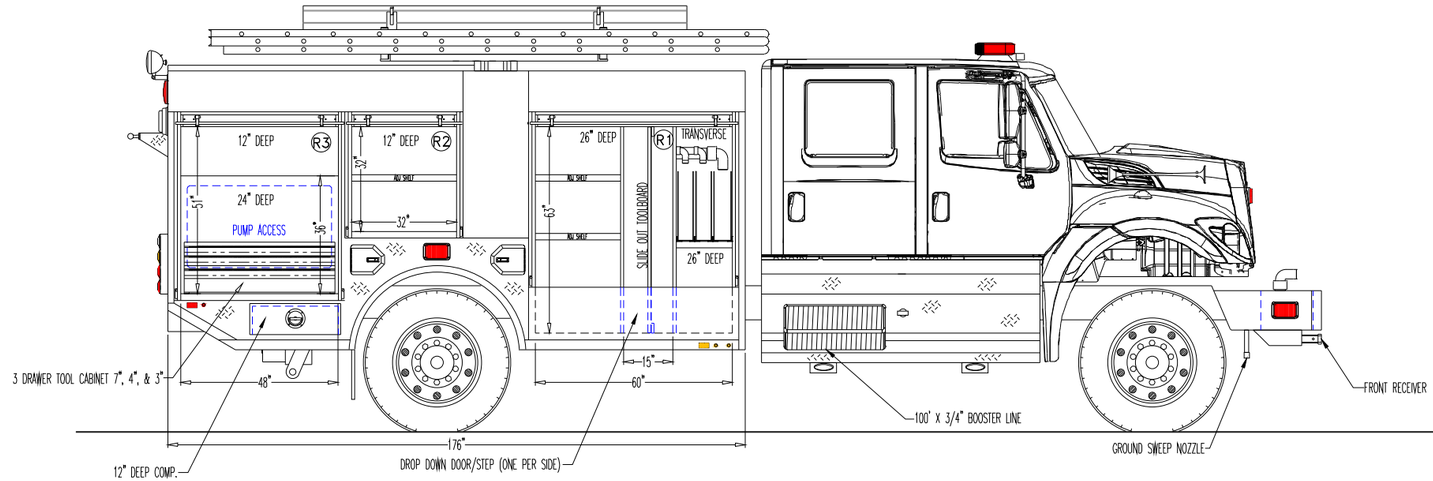

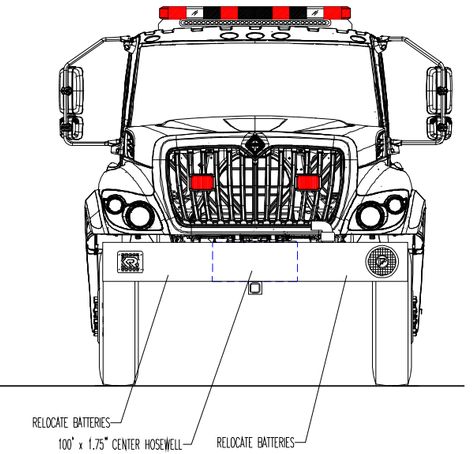

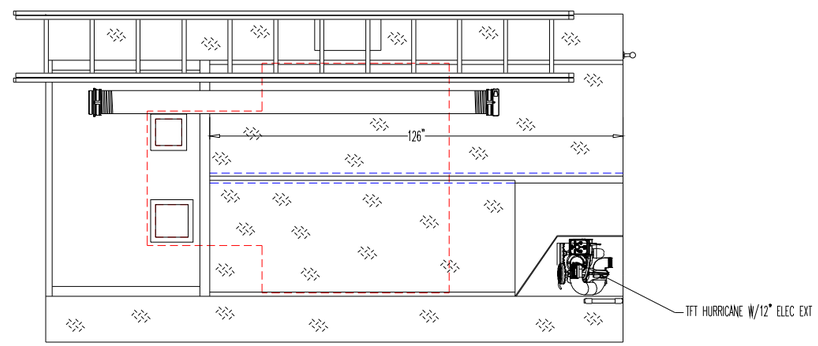

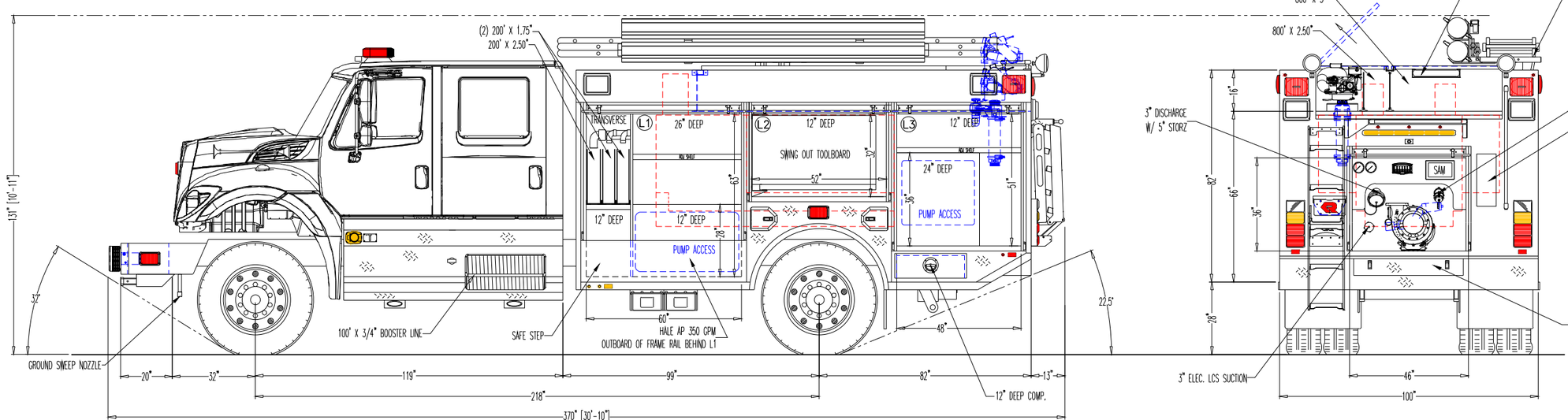

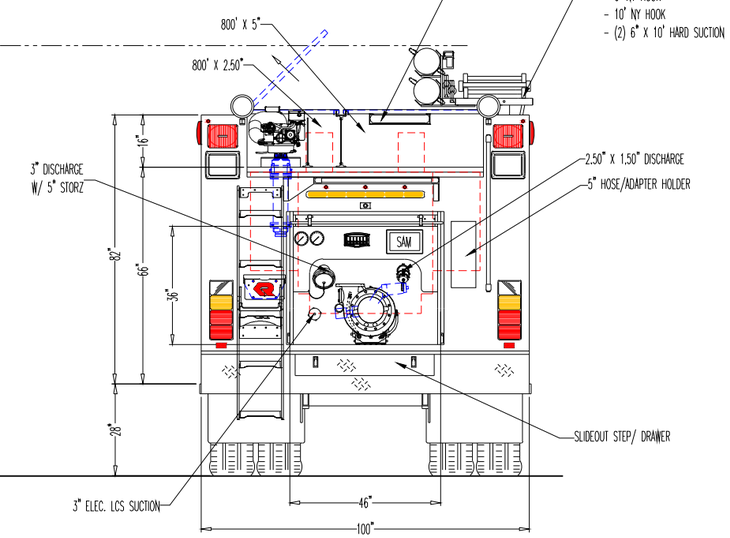

NOTES:
1. OVERALL HEIGHT IS IN LOADED CONDITION. UNLOADED HEIGHTS MAY BE 4" ABOVE HEIGHTS SHOWN.
2. DO NOT SCALE DRAWING.
3. ALL DIMENSIONS ARE APPROXIMATE AND SUBJECT TO ENGINEERING CHANGES.
4. DRAWING MAY OR MAY NOT SHOW ALL ITEMS AS DESCRIBED IN THE WRITTEN DETAIL SPECIFICATIONS.
5. INCLUSION OF AN ITEM ON THE DRAWING DOES NOT CONSTITUTE INCLUSION OF THAT ITEM WITH THE FINAL DELIVERED UNIT.

REVISED:	-	DATE:	-
REVISED:	-	DATE:	-
REVISED:	TAA	DATE:	10-13-2023 (R-02)
DRAWN:	TAA	DATE:	02-21-2023 (P8740-02)

PROPRIETARY AND CONFIDENTIAL
THE INFORMATION CONTAINED IN THIS DRAWING IS THE SOLE PROPERTY OF ROSENBAUER. ANY REPRODUCTION IN PART OR AS A WHOLE WITHOUT THE WRITTEN PERMISSION OF ROSENBAUER IS PROHIBITED.

APPROVED BY:

MAXIMUM HEIGHT	N/A
MAXIMUM LENGTH	N/A
BODY WIDTH	100"

CHASSIS: INTERNATIONAL HV507 4X4 4DR
PUMP: HALE RSD 1500 GPM PTO
PUMP 2: HALE AP 350 GPM
TANK: POLY 750 / 20 FOAM
TYPE: TIMBERWOLF

PUEBLO WEST CO.

rosenbauer

ROSENBAUER EXT

JOB NUMBER	DRAWING NUMBER	REV
95826	D00009	02