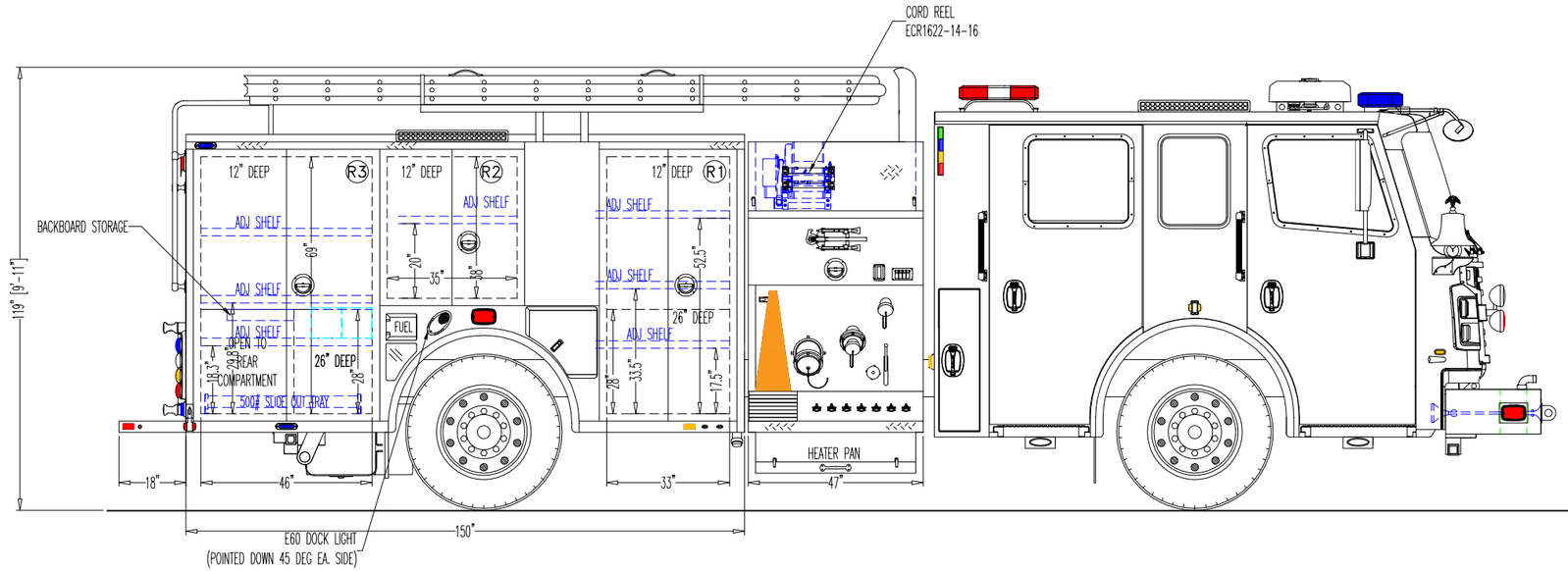

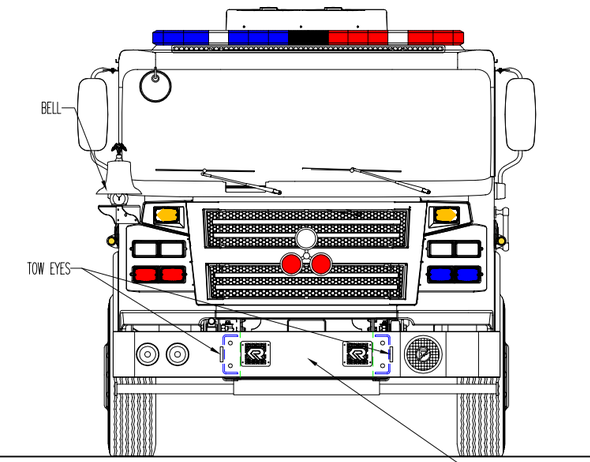

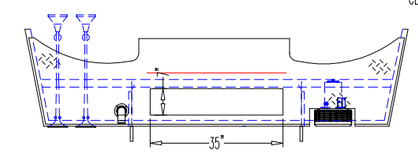

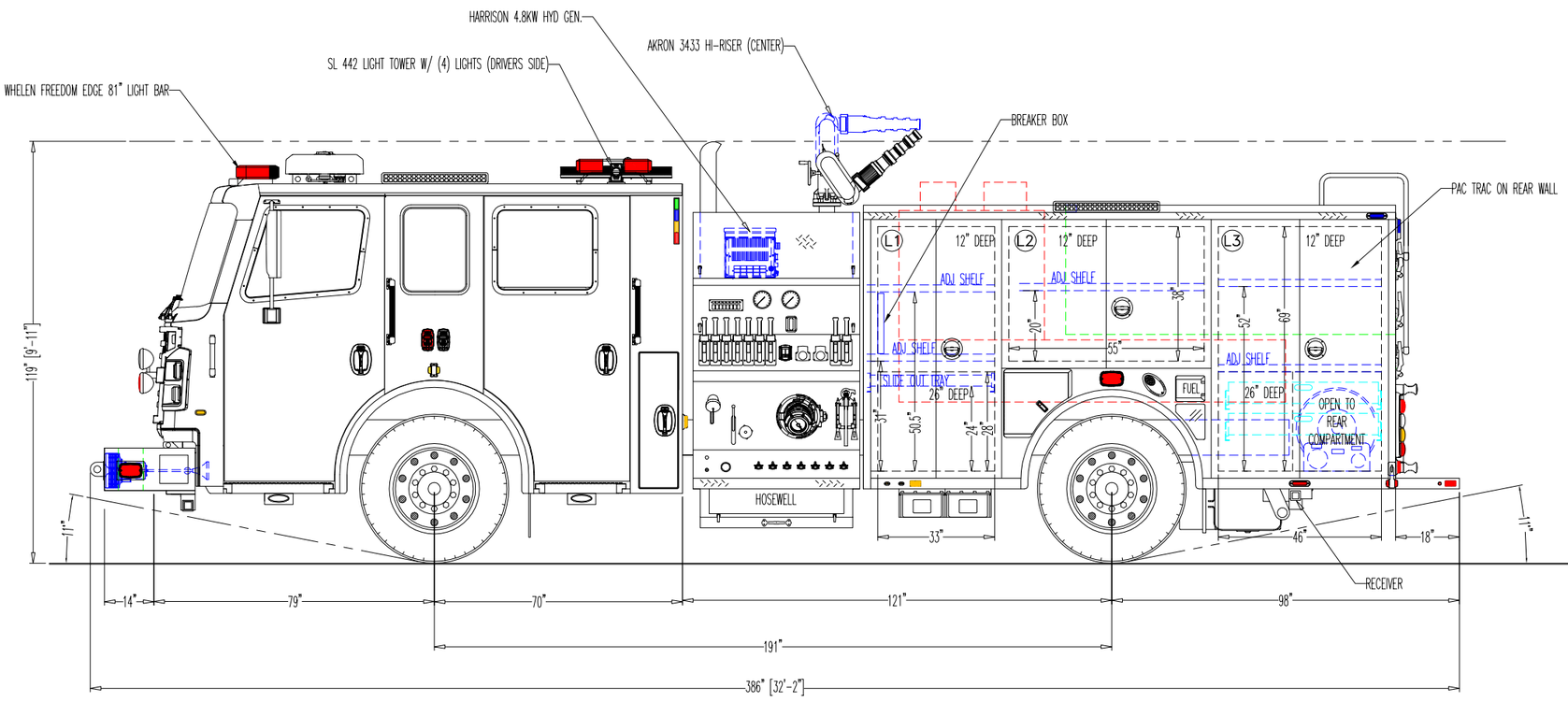

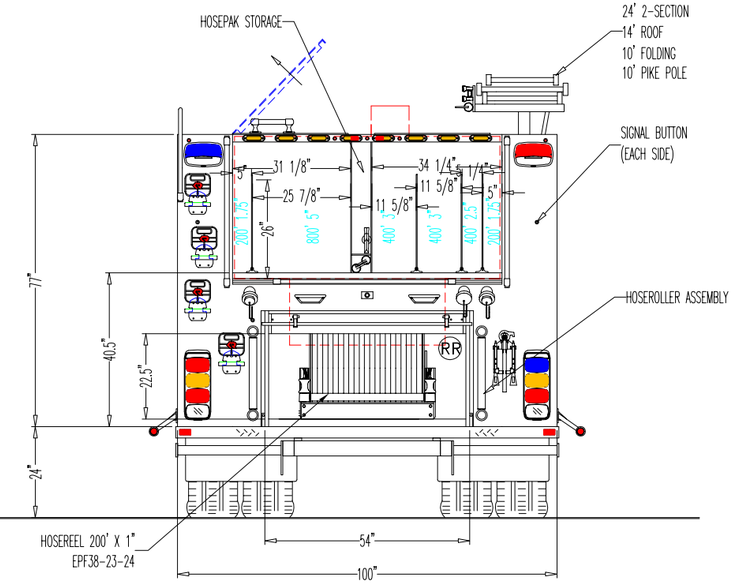

NOTES:
1. OVERALL HEIGHT IS IN LOADED CONDITION. UNLOADED HEIGHTS MAY BE 4" ABOVE HEIGHTS SHOWN.
2. DO NOT SCALE DRAWING.
3. ALL DIMENSIONS ARE APPROXIMATE AND SUBJECT TO ENGINEERING CHANGES.
4. DRAWING MAY OR MAY NOT SHOW ALL ITEMS AS DESCRIBED IN THE WRITTEN DETAIL SPECIFICATIONS.
5. INCLUSION OF AN ITEM ON THE DRAWING DOES NOT CONSTITUTE INCLUSION OF THAT ITEM WITH THE FINAL DELIVERED UNIT.

REVISED:	-	DATE: -
REVISED:	-	DATE: -
REVISED:	-	DATE: -
DRAWN:	MDL	DATE: 10-09-2024 (P6722-04)

PROPRIETARY AND CONFIDENTIAL
THE INFORMATION CONTAINED IN THIS DRAWING IS THE SOLE PROPERTY OF ROSENBAUER. ANY REPRODUCTION IN PART OR AS A WHOLE WITHOUT THE WRITTEN PERMISSION OF ROSENBAUER IS PROHIBITED.

APPROVED BY:

MAXIMUM HEIGHT	N/A
MAXIMUM LENGTH	N/A
BODY WIDTH	100"

CHASSIS: COMMANDER R7000
PUMP: WATEROUS CMUC20 1500 GPM
TANK: POLY 650/ 30 (FOAM)
TYPE: PUMPER
AERIAL: N/A

POUDRE FIRE AUTHORITY

rosenbauer

ROSENBAUER EXT

-	D00583	01